Work Order ID 99944

April-16-13 12:37:37 PM

99944

Item ID: 646.4001 **Accept** *N900040100* **Setup Start** *NS1*

Revision ID: **Stop** *NS2*

Item Name: AS350 Cable Cutter

Start Date: 4/16/13 **Start Qty:** 1.00 *1*

Required Date: 4/30/13 **Req'd Qty:** 1.00 *1*

Reference:

Cust Item ID:

Customer:

Approvals: **Process Plan:** ML5 **Date:** 13-04-16 **Tooling:** **Date:** **Run Start** *NR1*

QC: **Date:** **SPC (Y/N):** **Date:** **Stop** *NR2*

Sequence ID/ Work Center ID	Operation Description	Set Up/ Run Hours	Tool ID	Tool #	Plan Code	Accept Qty	Reject Qty	Reject Number	Insp. Stamp
Draw Nbr: 646.4000	Revision Nbr: A								
100	DOCUMENT CONTROL	0.00	DAS 06 2-89			1			13/7/12
100									
DC	**Memo** ML	0.00							
Document Control	Photocopy bluefile & type labels per PPP 646.4001								
110	Pick Kit	0.00							
110									
Packaging	**Memo**	0.00							ML 13-06-19 SP
Packaging									
120	QC4- 100% Inspect kits for completeness	0.00	DAS 06 2-89			1			13/13/12
120									
QC	**Memo**	0.00							
Quality Control									

DQA: _____ Date: _____

NCR: Yes / No

WORK ORDER NON-CONFORMANCE / UPDATE

QA Closed: Date:

Work Order: _____

Part No. _____

NCR No. _____

DISPOSITION

Rework ☐
Scrap ☐
Use-as-is ☐
Work Order Update ☐

AGAINST DEPARTMENT/PROCESS

Skid-tube ☐ Crosstube ☐ Water Jet ☐ Engineering ☐
Machining ☐ Small Fab ☐ Prod. Eng. Coor. ☐ Quality ☐
Thermoforming ☐ Finishing ☐ Rec/Store/Packaging ☐ Other ☐
Large Fab ☐ Composite ☐ Supplier ☐ ☐

Root Cause		Date	Step	Qty	Description of work order update or Non-conformance	Initial Chief Eng	Action Description	Sign & Date	Verification	QC Inspector
Doc/Data	☐									
Equip/Tooling	☐									
Operator	☐									
Material	☐									
Setup	☐									
Other	☐									
Process	☐									
Supplier	☐									
Training	☐									
Unapproved	☐									

FAULT CATEGORY

Landing Gear

☐ Bending
☐ Centre Not Concentric to O/S
☐ Cracks
☐ Crushed/Crimped.
☐ Cuffs
☐ Heat Treat
☐ Inspection Strip in Tube
☐ Ripples in Bend
☐ Torque Waves in Extrusion
☐ Turning Sequence
☐ Wave/Twist in Tube

General

☐ Bend
☐ BOM/Route
☐ Broken/Damaged
☐ Burrs
☐ Contamination
☐ Countersink
☐ Cut Too Short
☐ Drill Holes
☐ Drawing
☐ Finish
☐ Folio
☐ Grain
☐ Hardware
☐ Inspection Incomplete
☐ Instructions Incomplete/Unclear
☐ Maintenance
☐ Mislabeled
☐ Misread
☐ Offset
☐ Out of Calibration
☐ Out of Sequence
☐ Outside Dimensions
☐ Ovalized
☐ Over/Under tolerance
☐ Part Incorrect
☐ Part Lost/Missing
☐ Part Moved
☐ Positioned Wrong
☐ Power Loss/Surge
☐ Pressure/Forced
☐ Temperature/Cure
☐ Weld
☐ Wrong Stock Pulled
☐ Other

_____
_____
_____

Work Order ID 99944

April-16-13 12:37:37 PM

99944

Item ID: 646.4001 **Accept** *N9000040100* **Setup Start** *NS1*

Revision ID: **Stop** *NS2*

Item Name: AS350 Cable Cutter

Start Date: 4/16/13 **Start Qty:** 1.00 *1*

Required Date: 4/30/13 **Req'd Qty:** 1.00 *1*

Reference:

Cust Item ID:

Customer:

Run Start *NR1*

Stop *NR2*

Approvals: **Process Plan:** _____ **Date:** _____ **Tooling:** **Date:**

QC: _____ **Date:** _____ **SPC (Y/N):** **Date:**

Sequence ID/ Work Center ID	Operation Description	Set Up/ Run Hours	Tool ID	Tool #	Plan Code	Accept Qty	Reject Qty	Reject Number	Insp. Stamp
130		0.00							
130	Packaging								
Packaging	**Memo**	0.00							
Packaging	Identify and pack for shipping as per PPP 646.4001 Location: I dont need								
140	QC21- Final Inspection - Work Order Release	0.00							
140									
QC	**Memo**	0.00							
Quality Control									

13/7/12 54

MLS 13-07-18

MF
13-7-8

DQA: _____ Date: _____

NCR: Yes / No

WORK ORDER NON-CONFORMANCE / UPDATE

QA Closed: Date:

Work Order: _____

Part No. _____

NCR No. _____

DISPOSITION

- Rework ☐
- Scrap ☐
- Use-as-is ☐
- Work Order Update ☐

AGAINST DEPARTMENT/PROCESS

- Skid-tube ☐
- Machining ☐
- Thermoforming ☐
- Large Fab ☐
- Crosstube ☐
- Small Fab ☐
- Finishing ☐
- Composite ☐
- Water Jet ☐
- Prod. Eng. Coor. ☐
- Rec/Store/Packaging ☐
- Supplier ☐
- Engineering ☐
- Quality ☐
- Other ☐

Root Cause		Date	Step	Qty	Description of work order update or Non-conformance	Initial Chief Eng	Action Description	Sign & Date	Verification	QC Inspector
Doc/Data										
Equip/Tooling										
Operator										
Material										
Setup										
Other										
Process										
Supplier										
Training										
Unapproved										

FAULT CATEGORY

Landing Gear

- ☐ Bending
- ☐ Centre Not Concentric to O/S
- ☐ Cracks
- ☐ Crushed/Crimped.
- ☐ Cuffs
- ☐ Heat Treat
- ☐ Inspection Strip in Tube
- ☐ Ripples in Bend
- ☐ Torque Waves in Extrusion
- ☐ Turning Sequence
- ☐ Wave/Twist in Tube

General

- ☐ Bend
- ☐ BOM/Route
- ☐ Broken/Damaged
- ☐ Burrs
- ☐ Contamination
- ☐ Countersink
- ☐ Cut Too Short
- ☐ Drill Holes
- ☐ Drawing
- ☐ Finish
- ☐ Folio
- ☐ Grain
- ☐ Hardware
- ☐ Inspection Incomplete
- ☐ Instructions Incomplete/Unclear
- ☐ Maintenance
- ☐ Mislabeled
- ☐ Misread
- ☐ Offset
- ☐ Out of Calibration
- ☐ Out of Sequence
- ☐ Outside Dimensions
- ☐ Ovalized
- ☐ Over/Under tolerance
- ☐ Part Incorrect
- ☐ Part Lost/Missing
- ☐ Part Moved
- ☐ Positioned Wrong
- ☐ Power Loss/Surge
- ☐ Pressure/Forced
- ☐ Temperature/Cure
- ☐ Weld
- ☐ Wrong Stock Pulled
- ☐ Other

_____

_____

_____

Picklist Print

April-16-13 12:37:42 PM

17

Work Order ID: 99944

99944

Parent Item: 646.4001

646 4001

Parent Item Name: AS350 Cable Cutter

Start Date: 4/16/13 **Required Date:** 4/30/13

Start Qty: 1.00 **Required Qty:** 1.00

Comments: IPP REV:A 12.10.23 NEW ISSUE DD VERF:JLM

Component Item ID/ Item Name	Replacement Item ID	Mfg/ Purch	Bin Item	Primary Location	Last Location	Route Seq ID	Unit of Measure	Qty on Hand	Qty per Kit	Total Qty	Qty Issued	Date Issued	Status
646.3301		Manufactured	No				Each	25.0000					
X *646 3301* Upper Cutter Assembly									**	0	M.H.	13-06-20	
				Location		**Loc Qty**		**Loc Code**					
SMB				ST139A		7				~~B93261~~			
					125083	7							
				ST545		18				B93242			
					93247	18							
646.3001		Manufactured	No				Each	17.0000					
646 3001 Lower Cutter Assembly									**	0	M.H.		
				Location		**Loc Qty**		**Loc Code**					
SMB				ST139A		9				B101102			
					125083	9							
				ST537		8							
					93425	8							
646.2910		Manufactured	No				Each	6.0000					
646 2910 Deflector									**	0	M.H.		
				Location		**Loc Qty**		**Loc Code**					
SMB				ST139A		6				~~B100122~~			
					125083	6							

DQA: _____ Date: _____

NCR: Yes / No

WORK ORDER NON-CONFORMANCE / UPDATE

QA Closed: Date:

Work Order: _____

Part No. _____

NCR No. _____

DISPOSITION

- Rework ☐
- Scrap ☐
- Use-as-is ☐
- Work Order Update ☐

AGAINST DEPARTMENT/PROCESS

- Skid-tube ☐
- Machining ☐
- Thermoforming ☐
- Large Fab ☐
- Crosstube ☐
- Small Fab ☐
- Finishing ☐
- Composite ☐
- Water Jet ☐
- Prod. Eng. Coor. ☐
- Rec/Store/Packaging ☐
- Supplier ☐
- Engineering ☐
- Quality ☐
- Other ☐

Root Cause		Date	Step	Qty	Description of work order update or Non-conformance	Initial Chief Eng	Action Description	Sign & Date	Verification	QC Inspector
Doc/Data	☐									
Equip/Tooling	☐									
Operator	☐									
Material	☐									
Setup	☐									
Other	☐									
Process	☐									
Supplier	☐									
Training	☐									
Unapproved	☐									

FAULT CATEGORY

Landing Gear

- ☐ Bending
- ☐ Centre Not Concentric to O/S
- ☐ Cracks
- ☐ Crushed/Crimped
- ☐ Cuffs
- ☐ Heat Treat
- ☐ Inspection Strip in Tube
- ☐ Ripples in Bend
- ☐ Torque Waves in Extrusion
- ☐ Turning Sequence
- ☐ Wave/Twist in Tube

General

- ☐ Bend
- ☐ BOM/Route
- ☐ Broken/Damaged
- ☐ Burrs
- ☐ Contamination
- ☐ Countersink
- ☐ Cut Too Short
- ☐ Drill Holes
- ☐ Drawing
- ☐ Finish
- ☐ Folio
- ☐ Grain
- ☐ Hardware
- ☐ Inspection Incomplete
- ☐ Instructions Incomplete/Unclear
- ☐ Maintenance
- ☐ Mislabeled
- ☐ Misread
- ☐ Offset
- ☐ Out of Calibration
- ☐ Out of Sequence
- ☐ Outside Dimensions
- ☐ Ovalized
- ☐ Over/Under tolerance
- ☐ Part Incorrect
- ☐ Part Lost/Missing
- ☐ Part Moved
- ☐ Positioned Wrong
- ☐ Power Loss/Surge
- ☐ Pressure/Forced
- ☐ Temperature/Cure
- ☐ Weld
- ☐ Wrong Stock Pulled
- ☐ Other

_____

_____

_____

Picklist Print

April-16-13 12:37:42 PM

Work Order ID: 99944 *99944*

Parent Item: 646.4001 *646 4001*

Parent Item Name: AS350 Cable Cutter

Start Date: 4/16/13 **Required Date:** 4/30/13

Start Qty: 1.00 **Required Qty:** 1.00

646.3810 Manufactured No Each 8.0000 **

646 3810

Bracket

Location	Loc Qty	Loc Code
ST139A	8	
93300	8	

646.3510 Manufactured No Each 3.0000 **

646 3510

Strut

Location	Loc Qty	Loc Code
ST139B	3	
125083	3	

646.3511 Manufactured No Each 2.0000 **

646 3511

Strut

Location	Loc Qty	Loc Code
ST	2	
125023	2	

646.3512 Manufactured No Each 1.0000 **

646 3512

Strut

Location	Loc Qty	Loc Code
ST139A	1	
125083	1	

646.3513 Manufactured No Each 24.0000 **

646 3513

Strut

Location	Loc Qty	Loc Code
ST139A	24	
125083	24	

DQA: _____ Date: _____

NCR: Yes / No

WORK ORDER NON-CONFORMANCE / UPDATE

QA Closed: Date:

Work Order: _____

Part No. _____

NCR No. _____

DISPOSITION

- Rework ☐
- Scrap ☐
- Use-as-is ☐
- Work Order Update ☐

AGAINST DEPARTMENT/PROCESS

- Skid-tube ☐
- Machining ☐
- Thermoforming ☐
- Large Fab ☐
- Crosstube ☐
- Small Fab ☐
- Finishing ☐
- Composite ☐
- Water Jet ☐
- Prod. Eng. Coor. ☐
- Rec/Store/Packaging ☐
- Supplier ☐
- Engineering ☐
- Quality ☐
- Other ☐

Root Cause		Date	Step	Qty	Description of work order update or Non-conformance	Initial Chief Eng	Action Description	Sign & Date	Verification	QC Inspector
Doc/Data										
Equip/Tooling										
Operator										
Material										
Setup										
Other										
Process										
Supplier										
Training										
Unapproved										

FAULT CATEGORY

Landing Gear

- ☐ Bending
- ☐ Centre Not Concentric to O/S
- ☐ Cracks
- ☐ Crushed/Crimped
- ☐ Cuffs
- ☐ Heat Treat
- ☐ Inspection Strip in Tube
- ☐ Ripples in Bend
- ☐ Torque Waves in Extrusion
- ☐ Turning Sequence
- ☐ Wave/Twist in Tube

General

- ☐ Bend
- ☐ BOM/Route
- ☐ Broken/Damaged
- ☐ Burrs
- ☐ Contamination
- ☐ Countersink
- ☐ Cut Too Short
- ☐ Drill Holes
- ☐ Drawing
- ☐ Finish
- ☐ Folio
- ☐ Grain
- ☐ Hardware
- ☐ Inspection Incomplete
- ☐ Instructions Incomplete/Unclear
- ☐ Maintenance
- ☐ Mislabeled
- ☐ Misread
- ☐ Offset
- ☐ Out of Calibration
- ☐ Out of Sequence
- ☐ Outside Dimensions
- ☐ Ovalized
- ☐ Over/Under tolerance
- ☐ Part Incorrect
- ☐ Part Lost/Missing
- ☐ Part Moved
- ☐ Positioned Wrong
- ☐ Power Loss/Surge
- ☐ Pressure/Forced
- ☐ Temperature/Cure
- ☐ Weld
- ☐ Wrong Stock Pulled
- ☐ Other

_____

_____

_____

Picklist Print

April-16-13 12:37:42 PM

Work Order ID: 99944

99944

Parent Item: 646.4001

646 4001

Parent Item Name: AS350 Cable Cutter

Start Date: 4/16/13 **Required Date:** 4/30/13

Start Qty: 1.00 **Required Qty:** 1.00

NAS1149F0332P Purchased No Each 8.710.000 **

NAS1149F0332P

WASHER

Location	Loc Qty	Loc Code
GA	182	
122063	182	
ST294	158	
122063	158	
ST295	3	
123352	3	
st510	8367	
123900	8367	

MS21042L3 Purchased No Each 4,780.000 **

MS21042L3

Nut

Location	Loc Qty	Loc Code
FP001	3	
122141	3	
GA	119	
122452	119	
ST314	268	
117885	32	
119017	55	
119075	138	
123265	43	
ST506	4390	
123900	974	
124291	3416	

DQA: _____ Date: _____

NCR: Yes / No

WORK ORDER NON-CONFORMANCE / UPDATE

QA Closed: Date:

Work Order: _____

Part No. _____

NCR No. _____

DISPOSITION

- Rework ☐
- Scrap ☐
- Use-as-is ☐
- Work Order Update ☐

AGAINST DEPARTMENT/PROCESS

- Skid-tube ☐
- Machining ☐
- Thermoforming ☐
- Large Fab ☐
- Crosstube ☐
- Small Fab ☐
- Finishing ☐
- Composite ☐
- Water Jet ☐
- Prod. Eng. Coor. ☐
- Rec/Store/Packaging ☐
- Supplier ☐
- Engineering ☐
- Quality ☐
- Other ☐

Root Cause		Date	Step	Qty	Description of work order update or Non-conformance	Initial Chief Eng	Action Description	Sign & Date	Verification	QC Inspector
Doc/Data										
Equip/Tooling										
Operator										
Material										
Setup										
Other										
Process										
Supplier										
Training										
Unapproved										

FAULT CATEGORY

Landing Gear

- ☐ Bending
- ☐ Centre Not Concentric to O/S
- ☐ Cracks
- ☐ Crushed/Crimped
- ☐ Cuffs
- ☐ Heat Treat
- ☐ Inspection Strip in Tube
- ☐ Ripples in Bend
- ☐ Torque Waves in Extrusion
- ☐ Turning Sequence
- ☐ Wave/Twist in Tube

General

- ☐ Bend
- ☐ BOM/Route
- ☐ Broken/Damaged
- ☐ Burrs
- ☐ Contamination
- ☐ Countersink
- ☐ Cut Too Short
- ☐ Drill Holes
- ☐ Drawing
- ☐ Finish
- ☐ Folio
- ☐ Grain
- ☐ Hardware
- ☐ Inspection Incomplete
- ☐ Instructions Incomplete/Unclear
- ☐ Maintenance
- ☐ Mislabeled
- ☐ Misread
- ☐ Offset
- ☐ Out of Calibration
- ☐ Out of Sequence
- ☐ Outside Dimensions
- ☐ Ovalized
- ☐ Over/Under tolerance
- ☐ Part Incorrect
- ☐ Part Lost/Missing
- ☐ Part Moved
- ☐ Positioned Wrong
- ☐ Power Loss/Surge
- ☐ Pressure/Forced
- ☐ Temperature/Cure
- ☐ Weld
- ☐ Wrong Stock Pulled
- ☐ Other

_____

_____

_____

Picklist Print

April-16-13 12:37:42 PM

Work Order ID: 99944 *99944*

Parent Item: 646.4001 *646 4001*

Parent Item Name: AS350 Cable Cutter

Start Date: 4/16/13 **Required Date:** 4/30/13

Start Qty: 1.00 **Required Qty:** 1.00

646.3110	Manufactured	No		Each	6.0000

646.3110
Channel

SHP

Location	Loc Qty	Loc Code
ST139A	6	
125083	6	

646.3710	Manufactured	No		Each	22.0000

646.3710
Doubler

SHP

Location	Loc Qty	Loc Code
ST425	22	
97175	22	

646.3210	Manufactured	No		Each	5.0000

646.3210
Support

SHP

Location	Loc Qty	Loc Code
ST538	5	
93488	5	

646.3713	Manufactured	No		Each	7.0000

646.3713
Gusset

SHP

Location	Loc Qty	Loc Code
ST139A	7	
93208	7	

DQA: _____ Date: _____

NCR: Yes / No

WORK ORDER NON-CONFORMANCE / UPDATE

QA Closed: Date:

Work Order: _____

Part No. _____

NCR No. _____

DISPOSITION

- Rework ☐
- Scrap ☐
- Use-as-is ☐
- Work Order Update ☐

AGAINST DEPARTMENT/PROCESS

- Skid-tube ☐
- Machining ☐
- Thermoforming ☐
- Large Fab ☐
- Crosstube ☐
- Small Fab ☐
- Finishing ☐
- Composite ☐
- Water Jet ☐
- Prod. Eng. Coor. ☐
- Rec/Store/Packaging ☐
- Supplier ☐
- Engineering ☐
- Quality ☐
- Other ☐

Root Cause		Date	Step	Qty	Description of work order update or Non-conformance	Initial Chief Eng	Action Description	Sign & Date	Verification	QC Inspector
Doc/Data										
Equip/Tooling										
Operator										
Material										
Setup										
Other										
Process										
Supplier										
Training										
Unapproved										

FAULT CATEGORY

Landing Gear

- ☐ Bending
- ☐ Centre Not Concentric to O/S
- ☐ Cracks
- ☐ Crushed/Crimped
- ☐ Cuffs
- ☐ Heat Treat
- ☐ Inspection Strip in Tube
- ☐ Ripples in Bend
- ☐ Torque Waves in Extrusion
- ☐ Turning Sequence
- ☐ Wave/Twist in Tube

General

- ☐ Bend
- ☐ BOM/Route
- ☐ Broken/Damaged
- ☐ Burrs
- ☐ Contamination
- ☐ Countersink
- ☐ Cut Too Short
- ☐ Drill Holes
- ☐ Drawing
- ☐ Finish
- ☐ Folio
- ☐ Grain
- ☐ Hardware
- ☐ Inspection Incomplete
- ☐ Instructions Incomplete/Unclear
- ☐ Maintenance
- ☐ Mislabeled
- ☐ Misread
- ☐ Offset
- ☐ Out of Calibration
- ☐ Out of Sequence
- ☐ Outside Dimensions
- ☐ Ovalized
- ☐ Over/Under tolerance
- ☐ Part Incorrect
- ☐ Part Lost/Missing
- ☐ Part Moved
- ☐ Positioned Wrong
- ☐ Power Loss/Surge
- ☐ Pressure/Forced
- ☐ Temperature/Cure
- ☐ Weld
- ☐ Wrong Stock Pulled
- ☐ Other _____

Picklist Print

April-16-13 12:37:42 PM

Work Order ID: 99944

99944

Parent Item: 646.4001

646 4001

Parent Item Name: AS350 Cable Cutter

Start Date: 4/16/13 **Required Date:** 4/30/13

Start Qty: 1.00 **Required Qty:** 1.00

MS24694-S51 Purchased No Each 108.0000 **

MS24694-S51

Screw

Location	Loc Qty	Loc Code
ST303	108	
116805	1	
123741	107	

AN3-13A Purchased No Each 95.0000 **

AN3-13A

Bolt

Location	Loc Qty	Loc Code
ST351	45	
104746	15	
120910	30	
ST512	50	
123759	50	

AN3-4A Purchased No Each 453.0000 **

AN3-4A

Bolt

Location	Loc Qty	Loc Code
ST350	318	
120308	80	
122814	38	
124858	200	
ST512	135	
120770	134	
123900	1	

DQA: _____ Date: _____

NCR: Yes / No

WORK ORDER NON-CONFORMANCE / UPDATE

QA Closed: Date:

Work Order: _____

Part No. _____

NCR No. _____

DISPOSITION

- Rework ☐
- Scrap ☐
- Use-as-is ☐
- Work Order Update ☐

AGAINST DEPARTMENT/PROCESS

- Skid-tube ☐
- Machining ☐
- Thermoforming ☐
- Large Fab ☐
- Crosstube ☐
- Small Fab ☐
- Finishing ☐
- Composite ☐
- Water Jet ☐
- Prod. Eng. Coor. ☐
- Rec/Store/Packaging ☐
- Supplier ☐
- Engineering ☐
- Quality ☐
- Other ☐

Root Cause		Date	Step	Qty	Description of work order update or Non-conformance	Initial Chief Eng	Action Description	Sign & Date	Verification	QC Inspector
Doc/Data										
Equip/Tooling										
Operator										
Material										
Setup										
Other										
Process										
Supplier										
Training										
Unapproved										

FAULT CATEGORY

Landing Gear

- ☐ Bending
- ☐ Centre Not Concentric to O/S
- ☐ Cracks
- ☐ Crushed/Crimped
- ☐ Cuffs
- ☐ Heat Treat
- ☐ Inspection Strip in Tube
- ☐ Ripples in Bend
- ☐ Torque Waves in Extrusion
- ☐ Turning Sequence
- ☐ Wave/Twist in Tube

General

- ☐ Bend
- ☐ BOM/Route
- ☐ Broken/Damaged
- ☐ Burrs
- ☐ Contamination
- ☐ Countersink
- ☐ Cut Too Short
- ☐ Drill Holes
- ☐ Drawing
- ☐ Finish
- ☐ Folio
- ☐ Grain
- ☐ Hardware
- ☐ Inspection Incomplete
- ☐ Instructions Incomplete/Unclear
- ☐ Maintenance
- ☐ Mislabeled
- ☐ Misread
- ☐ Offset
- ☐ Out of Calibration
- ☐ Out of Sequence
- ☐ Outside Dimensions
- ☐ Ovalized
- ☐ Over/Under tolerance
- ☐ Part Incorrect
- ☐ Part Lost/Missing
- ☐ Part Moved
- ☐ Positioned Wrong
- ☐ Power Loss/Surge
- ☐ Pressure/Forced
- ☐ Temperature/Cure
- ☐ Weld
- ☐ Wrong Stock Pulled
- ☐ Other

_____

_____

_____

Picklist Print

April-16-13 12:37:43 PM

Work Order ID: 99944 *99944*

Parent Item: 646.4001 *646 4001*

Parent Item Name: AS350 Cable Cutter

Start Date: 4/16/13 **Required Date:** 4/30/13

Start Qty: 1.00 **Required Qty:** 1.00

CR3213-5-3 Purchased No Each 300.0000 **

CR3213-5-3

Cherry Rivet

Location	Loc Qty	Loc Code
ST329	300	
123785	300	

14 X

M.H. 13-06-20

MS20470AD5-5.5 Purchased No Each 741.0000 **

MS20470AD5-5.5

Rivet

Location	Loc Qty	Loc Code
ST336	741	
123425	741	

8 X

M.H.

646.3711 Manufactured No Each 2.0000 **

646.3711

Clip

Location	Loc Qty	Loc Code
ST139B	2	
125083	2	

B102554

M.H.

646.3712 Manufactured No Each 2.0000 **

646.3712

Clip

Location	Loc Qty	Loc Code
ST139B	2	
125083	2	

B 102553

M.H.

DQA: _____ Date: _____

NCR: Yes / No

WORK ORDER NON-CONFORMANCE / UPDATE

QA Closed: Date:

Work Order: _____

Part No. _____

NCR No. _____

DISPOSITION

- Rework ☐
- Scrap ☐
- Use-as-is ☐
- Work Order Update ☐

AGAINST DEPARTMENT/PROCESS

- Skid-tube ☐
- Machining ☐
- Thermoforming ☐
- Large Fab ☐
- Crosstube ☐
- Small Fab ☐
- Finishing ☐
- Composite ☐
- Water Jet ☐
- Prod. Eng. Coor. ☐
- Rec/Store/Packaging ☐
- Supplier ☐
- Engineering ☐
- Quality ☐
- Other ☐

Root Cause		Date	Step	Qty	Description of work order update or Non-conformance	Initial Chief Eng	Action Description	Sign & Date	Verification	QC Inspector
Doc/Data										
Equip/Tooling										
Operator										
Material										
Setup										
Other										
Process										
Supplier										
Training										
Unapproved										

FAULT CATEGORY

Landing Gear

- ☐ Bending
- ☐ Centre Not Concentric to O/S
- ☐ Cracks
- ☐ Crushed/Crimped
- ☐ Cuffs
- ☐ Heat Treat
- ☐ Inspection Strip in Tube
- ☐ Ripples in Bend
- ☐ Torque Waves in Extrusion
- ☐ Turning Sequence
- ☐ Wave/Twist in Tube

General

- ☐ Bend
- ☐ BOM/Route
- ☐ Broken/Damaged
- ☐ Burrs
- ☐ Contamination
- ☐ Countersink
- ☐ Cut Too Short
- ☐ Drill Holes
- ☐ Drawing
- ☐ Finish
- ☐ Folio
- ☐ Grain
- ☐ Hardware
- ☐ Inspection Incomplete
- ☐ Instructions Incomplete/Unclear
- ☐ Maintenance
- ☐ Mislabeled
- ☐ Misread
- ☐ Offset
- ☐ Out of Calibration
- ☐ Out of Sequence
- ☐ Outside Dimensions
- ☐ Ovalized
- ☐ Over/Under tolerance
- ☐ Part Incorrect
- ☐ Part Lost/Missing
- ☐ Part Moved
- ☐ Positioned Wrong
- ☐ Power Loss/Surge
- ☐ Pressure/Forced
- ☐ Temperature/Cure
- ☐ Weld
- ☐ Wrong Stock Pulled
- ☐ Other _____

Picklist Print

April-16-13 12:37:43 PM

Work Order ID: 99944 *99944*

Parent Item: 646.4001 *646 4001*

Parent Item Name: AS350 Cable Cutter

Start Date: 4/16/13 **Required Date:** 4/30/13

Start Qty: 1.00 **Required Qty:** 1.00

646.3811 Manufactured No Each 29.0000 **

646 3811

Radius Block

Location	Loc Qty	Loc Code
ST139A	29	
125083	9	
93224	20	

AN3-6A Purchased No Each 438.0000 **

AN3-6A

Bolt

Location	Loc Qty	Loc Code
ST350	300	
124296	300	
ST351	61	
117441	34	
121166	13	
122993	10	
123831	4	
ST512	77	
122814	77	

MS24694-S55 Purchased No Each 92.0000 **

MS24694-S55

Screw

Location	Loc Qty	Loc Code
ST303	92	
124296	92	

DQA: _____ Date: _____

NCR: Yes / No

WORK ORDER NON-CONFORMANCE / UPDATE

QA Closed: Date:

Work Order: _____

Part No. _____

NCR No. _____

DISPOSITION

- Rework ☐
- Scrap ☐
- Use-as-is ☐
- Work Order Update ☐

AGAINST DEPARTMENT/PROCESS

- Skid-tube ☐
- Machining ☐
- Thermoforming ☐
- Large Fab ☐
- Crosstube ☐
- Small Fab ☐
- Finishing ☐
- Composite ☐
- Water Jet ☐
- Prod. Eng. Coor. ☐
- Rec/Store/Packaging ☐
- Supplier ☐
- Engineering ☐
- Quality ☐
- Other ☐

Root Cause		Date	Step	Qty	Description of work order update or Non-conformance	Initial Chief Eng	Action Description	Sign & Date	Verification	QC Inspector
Doc/Data										
Equip/Tooling										
Operator										
Material										
Setup										
Other										
Process										
Supplier										
Training										
Unapproved										

FAULT CATEGORY

Landing Gear

- ☐ Bending
- ☐ Centre Not Concentric to O/S
- ☐ Cracks
- ☐ Crushed/Crimped
- ☐ Cuffs
- ☐ Heat Treat
- ☐ Inspection Strip in Tube
- ☐ Ripples in Bend
- ☐ Torque Waves in Extrusion
- ☐ Turning Sequence
- ☐ Wave/Twist in Tube

General

- ☐ Bend
- ☐ BOM/Route
- ☐ Broken/Damaged
- ☐ Burrs
- ☐ Contamination
- ☐ Countersink
- ☐ Cut Too Short
- ☐ Drill Holes
- ☐ Drawing
- ☐ Finish
- ☐ Folio
- ☐ Grain
- ☐ Hardware
- ☐ Inspection Incomplete
- ☐ Instructions Incomplete/Unclear
- ☐ Maintenance
- ☐ Mislabeled
- ☐ Misread
- ☐ Offset
- ☐ Out of Calibration
- ☐ Out of Sequence
- ☐ Outside Dimensions
- ☐ Ovalized
- ☐ Over/Under tolerance
- ☐ Part Incorrect
- ☐ Part Lost/Missing
- ☐ Part Moved
- ☐ Positioned Wrong
- ☐ Power Loss/Surge
- ☐ Pressure/Forced
- ☐ Temperature/Cure
- ☐ Weld
- ☐ Wrong Stock Pulled
- ☐ Other _____

Picklist Print

April-16-13 12:37:43 PM

Work Order ID: 99944 *99944*

Parent Item: 646.4001 *646 4001*

Parent Item Name: AS350 Cable Cutter

Start Date: 4/16/13 **Required Date:** 4/30/13

Start Qty: 1.00 **Required Qty:** 1.00

646.3610 Manufactured No Each 18.0000 **

646 3610

Filler

Location	Loc Qty	Loc Code
125083	7	
125083	7	
ST139A	11	
93434	11	

646.3714 Manufactured No Each 2.0000 **

646 3714

Gusset

Location	Loc Qty	Loc Code
ST139A	2	
93175	2	

MS20470AD5-6 Purchased No Each 1,756.000 **

MS20470AD5-6

Rivet

Location	Loc Qty	Loc Code
ST336	1756	
105433	866	
124089	890	

646.3812 Manufactured No Each 9.0000 **

646 3812

Gusset Bracket

Location	Loc Qty	Loc Code
ST139B	9	
93185	9	

DQA: _____ Date: _____

NCR: Yes / No

WORK ORDER NON-CONFORMANCE / UPDATE

QA Closed: Date:

Work Order: _____

Part No. _____

NCR No. _____

DISPOSITION

- Rework ☐
- Scrap ☐
- Use-as-is ☐
- Work Order Update ☐

AGAINST DEPARTMENT/PROCESS

- Skid-tube ☐
- Machining ☐
- Thermoforming ☐
- Large Fab ☐
- Crosstube ☐
- Small Fab ☐
- Finishing ☐
- Composite ☐
- Water Jet ☐
- Prod. Eng. Coor. ☐
- Rec/Store/Packaging ☐
- Supplier ☐
- Engineering ☐
- Quality ☐
- Other ☐

Root Cause		Date	Step	Qty	Description of work order update or Non-conformance	Initial Chief Eng	Action Description	Sign & Date	Verification	QC Inspector
Doc/Data										
Equip/Tooling										
Operator										
Material										
Setup										
Other										
Process										
Supplier										
Training										
Unapproved										

FAULT CATEGORY

Landing Gear

- ☐ Bending
- ☐ Centre Not Concentric to O/S
- ☐ Cracks
- ☐ Crushed/Crimped.
- ☐ Cuffs
- ☐ Heat Treat
- ☐ Inspection Strip in Tube
- ☐ Ripples in Bend
- ☐ Torque Waves in Extrusion
- ☐ Turning Sequence
- ☐ Wave/Twist in Tube

General

- ☐ Bend
- ☐ BOM/Route
- ☐ Broken/Damaged
- ☐ Burrs
- ☐ Contamination
- ☐ Countersink
- ☐ Cut Too Short
- ☐ Drill Holes
- ☐ Drawing
- ☐ Finish
- ☐ Folio
- ☐ Grain
- ☐ Hardware
- ☐ Inspection Incomplete
- ☐ Instructions Incomplete/Unclear
- ☐ Maintenance
- ☐ Mislabeled
- ☐ Misread
- ☐ Offset
- ☐ Out of Calibration
- ☐ Out of Sequence
- ☐ Outside Dimensions
- ☐ Ovalized
- ☐ Over/Under tolerance
- ☐ Part Incorrect
- ☐ Part Lost/Missing
- ☐ Part Moved
- ☐ Positioned Wrong
- ☐ Power Loss/Surge
- ☐ Pressure/Forced
- ☐ Temperature/Cure
- ☐ Weld
- ☐ Wrong Stock Pulled
- ☐ Other _____

Picklist Print

April-16-13 12:37:43 PM

Work Order ID: 99944

99944

Parent Item: 646.4001

646 4001

Parent Item Name: AS350 Cable Cutter

Start Date: 4/16/13 **Required Date:** 4/30/13

Start Qty: 1.00 **Required Qty:** 1.00

AN3-3A Purchased No Each 268.0000 **

AN3-3A

Bolt

SHP

Location	Loc Qty	Loc Code
ST350	268	
123831	7	
124221	200	
124552	61	

646.3813 Manufactured No Each 5.0000 **

646 3813

Strut Bracket

SHP

Location	Loc Qty	Loc Code
ST139d	5	
125083	5	

MS20470AD5-7 Purchased No Each 2,194.000 **

MS20470AD5-7

Rivet

SHP

Location	Loc Qty	Loc Code
Mezz	1384	
2655	799	
3011	585	
ST336	810	
123425	810	

MS21047-3 Purchased No Each 445.0000 **

MS21047-3

NUT PLATE

SHP

Location	Loc Qty	Loc Code
ST316	445	
123268	75	
123301	50	
123522	320	

DQA: _____ Date: _____

NCR: Yes / No

WORK ORDER NON-CONFORMANCE / UPDATE

QA Closed: Date:

Work Order: _____

Part No. _____

NCR No. _____

DISPOSITION

- Rework ☐
- Scrap ☐
- Use-as-is ☐
- Work Order Update ☐

AGAINST DEPARTMENT/PROCESS

- Skid-tube ☐
- Machining ☐
- Thermoforming ☐
- Large Fab ☐
- Crosstube ☐
- Small Fab ☐
- Finishing ☐
- Composite ☐
- Water Jet ☐
- Prod. Eng. Coor. ☐
- Rec/Store/Packaging ☐
- Supplier ☐
- Engineering ☐
- Quality ☐
- Other ☐

Root Cause		Date	Step	Qty	Description of work order update or Non-conformance	Initial Chief Eng	Action Description	Sign & Date	Verification	QC Inspector
Doc/Data										
Equip/Tooling										
Operator										
Material										
Setup										
Other										
Process										
Supplier										
Training										
Unapproved										

FAULT CATEGORY

Landing Gear

- ☐ Bending
- ☐ Centre Not Concentric to O/S
- ☐ Cracks
- ☐ Crushed/Crimped
- ☐ Cuffs
- ☐ Heat Treat
- ☐ Inspection Strip in Tube
- ☐ Ripples in Bend
- ☐ Torque Waves in Extrusion
- ☐ Turning Sequence
- ☐ Wave/Twist in Tube

General

- ☐ Bend
- ☐ BOM/Route
- ☐ Broken/Damaged
- ☐ Burrs
- ☐ Contamination
- ☐ Countersink
- ☐ Cut Too Short
- ☐ Drill Holes
- ☐ Drawing
- ☐ Finish
- ☐ Folio
- ☐ Grain
- ☐ Hardware
- ☐ Inspection Incomplete
- ☐ Instructions Incomplete/Unclear
- ☐ Maintenance
- ☐ Mislabeled
- ☐ Misread
- ☐ Offset
- ☐ Out of Calibration
- ☐ Out of Sequence
- ☐ Outside Dimensions
- ☐ Ovalized
- ☐ Over/Under tolerance
- ☐ Part Incorrect
- ☐ Part Lost/Missing
- ☐ Part Moved
- ☐ Positioned Wrong
- ☐ Power Loss/Surge
- ☐ Pressure/Forced
- ☐ Temperature/Cure
- ☐ Weld
- ☐ Wrong Stock Pulled
- ☐ Other _____

Picklist Print

April-16-13 12:37:43 PM

Work Order ID: 99944 *99944*

Parent Item: 646.4001 *646 4001*

Parent Item Name: AS350 Cable Cutter

Start Date: 4/16/13 **Required Date:** 4/30/13

Start Qty: 1.00 **Required Qty:** 1.00

CCR264SS3-02 Purchased No Each 740.0000 **

CCR264SS3-02

Rivet, Cherry

36

M.H. 13-06-20

SHP

Location	Loc Qty	Loc Code
ST327	740	125952
106578	100	
123785	240	
124231	200	
124259	200	

SHP

AN3-5A Purchased No Each 1,103.000 **

AN3-5A

Bolt

2

M.H.

SHP

Location	Loc Qty	Loc Code
FP001	86	
122800	86	
GA	120	
117423	120	
ST350	22	
120187	22	
ST512	875	
122416	75	
124561	800	2X

SHP

646.3715 Manufactured No Each 12.0000 **

646.3715

Strut Doubler

2

M.H.

SHP

Location	Loc Qty	Loc Code
ST139B	12	B102163
93338	12	

DQA: _____ Date: _____

NCR: Yes / No

WORK ORDER NON-CONFORMANCE / UPDATE

QA Closed: Date:

Work Order: _____

Part No. _____

NCR No. _____

DISPOSITION

- Rework ☐
- Scrap ☐
- Use-as-is ☐
- Work Order Update ☐

AGAINST DEPARTMENT/PROCESS

- Skid-tube ☐
- Machining ☐
- Thermoforming ☐
- Large Fab ☐
- Crosstube ☐
- Small Fab ☐
- Finishing ☐
- Composite ☐
- Water Jet ☐
- Prod. Eng. Coor. ☐
- Rec/Store/Packaging ☐
- Supplier ☐
- Engineering ☐
- Quality ☐
- Other ☐

Root Cause		Date	Step	Qty	Description of work order update or Non-conformance	Initial Chief Eng	Action Description	Sign & Date	Verification	QC Inspector
Doc/Data										
Equip/Tooling										
Operator										
Material										
Setup										
Other										
Process										
Supplier										
Training										
Unapproved										

FAULT CATEGORY

Landing Gear

- ☐ Bending
- ☐ Centre Not Concentric to O/S
- ☐ Cracks
- ☐ Crushed/Crimped
- ☐ Cuffs
- ☐ Heat Treat
- ☐ Inspection Strip in Tube
- ☐ Ripples in Bend
- ☐ Torque Waves in Extrusion
- ☐ Turning Sequence
- ☐ Wave/Twist in Tube

General

- ☐ Bend
- ☐ BOM/Route
- ☐ Broken/Damaged
- ☐ Burrs
- ☐ Contamination
- ☐ Countersink
- ☐ Cut Too Short
- ☐ Drill Holes
- ☐ Drawing
- ☐ Finish
- ☐ Folio
- ☐ Grain
- ☐ Hardware
- ☐ Inspection Incomplete
- ☐ Instructions Incomplete/Unclear
- ☐ Maintenance
- ☐ Mislabeled
- ☐ Misread
- ☐ Offset
- ☐ Out of Calibration
- ☐ Out of Sequence
- ☐ Outside Dimensions
- ☐ Ovalized
- ☐ Over/Under tolerance
- ☐ Part Incorrect
- ☐ Part Lost/Missing
- ☐ Part Moved
- ☐ Positioned Wrong
- ☐ Power Loss/Surge
- ☐ Pressure/Forced
- ☐ Temperature/Cure
- ☐ Weld
- ☐ Wrong Stock Pulled
- ☐ Other _____

Picklist Print

April-16-13 12:37:43 PM

Work Order ID: 99944 *99944*

Parent Item: 646.4001 *646 4001*

Parent Item Name: AS350 Cable Cutter

Start Date: 4/16/13 **Required Date:** 4/30/13

Start Qty: 1.00 **Required Qty:** 1.00

MS27039-1-12 Purchased No Each 169.0000 **

MS27039-1-12

Screw

Location	Loc Qty	Loc Code
Mezz	169	
100993	169	

646.3716 Manufactured No Each 4.0000 **

646 3716

Gauge Bracket

Location	Loc Qty	Loc Code
125083	4	
125083	4	

MS20426AD5-7 Purchased No Each 813.0000 **

MS20426AD5-7

Rivet

Location	Loc Qty	Loc Code
ST334	813	
101340	813	

MS24694-S54 Purchased No Each 76.0000 **

MS24694-S54

Screw

Location	Loc Qty	Loc Code
ST303	76	
123900	1	
124859	75	

DQA: _____ Date: _____

NCR: Yes / No

WORK ORDER NON-CONFORMANCE / UPDATE

QA Closed: Date:

Work Order: _____

Part No. _____

NCR No. _____

DISPOSITION

- Rework ☐
- Scrap ☐
- Use-as-is ☐
- Work Order Update ☐

AGAINST DEPARTMENT/PROCESS

- Skid-tube ☐
- Machining ☐
- Thermoforming ☐
- Large Fab ☐
- Crosstube ☐
- Small Fab ☐
- Finishing ☐
- Composite ☐
- Water Jet ☐
- Prod. Eng. Coor. ☐
- Rec/Store/Packaging ☐
- Supplier ☐
- Engineering ☐
- Quality ☐
- Other ☐

Root Cause		Date	Step	Qty	Description of work order update or Non-conformance	Initial Chief Eng	Action Description	Sign & Date	Verification	QC Inspector
Doc/Data										
Equip/Tooling										
Operator										
Material										
Setup										
Other										
Process										
Supplier										
Training										
Unapproved										

FAULT CATEGORY

Landing Gear

- ☐ Bending
- ☐ Centre Not Concentric to O/S
- ☐ Cracks
- ☐ Crushed/Crimped
- ☐ Cuffs
- ☐ Heat Treat
- ☐ Inspection Strip in Tube
- ☐ Ripples in Bend
- ☐ Torque Waves in Extrusion
- ☐ Turning Sequence
- ☐ Wave/Twist in Tube

General

- ☐ Bend
- ☐ BOM/Route
- ☐ Broken/Damaged
- ☐ Burrs
- ☐ Contamination
- ☐ Countersink
- ☐ Cut Too Short
- ☐ Drill Holes
- ☐ Drawing
- ☐ Finish
- ☐ Folio
- ☐ Grain
- ☐ Hardware
- ☐ Inspection Incomplete
- ☐ Instructions Incomplete/Unclear
- ☐ Maintenance
- ☐ Mislabeled
- ☐ Misread
- ☐ Offset
- ☐ Out of Calibration
- ☐ Out of Sequence
- ☐ Outside Dimensions
- ☐ Ovalized
- ☐ Over/Under tolerance
- ☐ Part Incorrect
- ☐ Part Lost/Missing
- ☐ Part Moved
- ☐ Positioned Wrong
- ☐ Power Loss/Surge
- ☐ Pressure/Forced
- ☐ Temperature/Cure
- ☐ Weld
- ☐ Wrong Stock Pulled
- ☐ Other _____

Picklist Print

April-16-13 12:37:43 PM

Work Order ID: 99944

Parent Item: 646.4001

Parent Item Name: AS350 Cable Cutter

99944
646 4001

Start Date: 4/16/13 **Required Date:** 4/30/13

Start Qty: 1.00 **Required Qty:** 1.00

MS27039-1-21 Purchased No Each 343.0000 **

MS27039-1-21
SCREW

Location	Loc Qty	Loc Code
ST306	43	
115935	43	
ST506	300	
124326	300	

MS27039-1-20 Purchased No Each 478.0000 **

MS27039-1-20
Screw

Location	Loc Qty	Loc Code
st510	478	
124326	478	

MS27039-1-19 Purchased No Each 848.0000 **

MS27039-1-19
Screw

Location	Loc Qty	Loc Code
ST306	102	
122814	2	
123522	100	
ST506	746	
124326	746	

646.3717 Manufactured No Each 2.0000 **

646.3717
Doubler

Location	Loc Qty	Loc Code
ST139B	2	
125083	2	

DQA: _____ Date: _____

NCR: Yes / No

WORK ORDER NON-CONFORMANCE / UPDATE

QA Closed: Date:

Work Order: _____

Part No. _____

NCR No. _____

DISPOSITION

Rework ☐
Scrap ☐
Use-as-is ☐
Work Order Update ☐

AGAINST DEPARTMENT/PROCESS

Skid-tube ☐ Crosstube ☐ Water Jet ☐ Engineering ☐
Machining ☐ Small Fab ☐ Prod. Eng. Coor. ☐ Quality ☐
Thermoforming ☐ Finishing ☐ Rec/Store/Packaging ☐ Other ☐
Large Fab ☐ Composite ☐ Supplier ☐ ☐

Root Cause		Date	Step	Qty	Description of work order update or Non-conformance	Initial Chief Eng	Action Description	Sign & Date	Verification	QC Inspector
Doc/Data	☐									
Equip/Tooling	☐									
Operator	☐									
Material	☐									
Setup	☐									
Other	☐									
Process	☐									
Supplier	☐									
Training	☐									
Unapproved	☐									

FAULT CATEGORY

Landing Gear

☐ Bending
☐ Centre Not Concentric to O/S
☐ Cracks
☐ Crushed/Crimped
☐ Cuffs
☐ Heat Treat
☐ Inspection Strip in Tube
☐ Ripples in Bend
☐ Torque Waves in Extrusion
☐ Turning Sequence
☐ Wave/Twist in Tube

General

☐ Bend
☐ BOM/Route
☐ Broken/Damaged
☐ Burrs
☐ Contamination
☐ Countersink
☐ Cut Too Short
☐ Drill Holes
☐ Drawing
☐ Finish
☐ Folio

☐ Grain
☐ Hardware
☐ Inspection Incomplete
☐ Instructions Incomplete/Unclear
☐ Maintenance
☐ Mislabeled
☐ Misread
☐ Offset
☐ Out of Calibration
☐ Out of Sequence
☐ Outside Dimensions

☐ Ovalized
☐ Over/Under tolerance
☐ Part Incorrect
☐ Part Lost/Missing
☐ Part Moved
☐ Positioned Wrong
☐ Power Loss/Surge

☐ Pressure/Forced
☐ Temperature/Cure
☐ Weld
☐ Wrong Stock Pulled

☐ Other

_____
_____
_____

Picklist Print

April-16-13 12:37:43 PM

Work Order ID: 99944 *99944*

Parent Item: 646.4001 *646 4001*

Parent Item Name: AS350 Cable Cutter

Start Date: 4/16/13 **Required Date:** 4/30/13

Start Qty: 1.00 **Required Qty:** 1.00

646.3718 Manufactured No Each 45.0000 **

646.3718

Custom Washer

Location	Loc Qty	Loc Code
ST139A	7	
125083	7	
ST522	38	
93365	38	

646.3719 Manufactured No Each 24.0000 **

646.3719

Doubler

Location	Loc Qty	Loc Code
ST139B	24	
125083	24	

MS27039-1-10 Purchased No Each 321.0000 **

MS27039-1-10

Screw

Location	Loc Qty	Loc Code
GA	100	
120449	100	
ST305	101	
122815	1	
124859	100	
ST308	18	
123522	18	
ST506	102	
124326	102	

DQA: _____ Date: _____

NCR: Yes / No

WORK ORDER NON-CONFORMANCE / UPDATE

QA Closed: Date:

Work Order: _____

Part No. _____

NCR No. _____

DISPOSITION

- Rework ☐
- Scrap ☐
- Use-as-is ☐
- Work Order Update ☐

AGAINST DEPARTMENT/PROCESS

- Skid-tube ☐
- Machining ☐
- Thermoforming ☐
- Large Fab ☐
- Crosstube ☐
- Small Fab ☐
- Finishing ☐
- Composite ☐
- Water Jet ☐
- Prod. Eng. Coor. ☐
- Rec/Store/Packaging ☐
- Supplier ☐
- Engineering ☐
- Quality ☐
- Other ☐

Root Cause		Date	Step	Qty	Description of work order update or Non-conformance	Initial Chief Eng	Action Description	Sign & Date	Verification	QC Inspector
Doc/Data										
Equip/Tooling										
Operator										
Material										
Setup										
Other										
Process										
Supplier										
Training										
Unapproved										

FAULT CATEGORY

Landing Gear

- ☐ Bending
- ☐ Centre Not Concentric to O/S
- ☐ Cracks
- ☐ Crushed/Crimped
- ☐ Cuffs
- ☐ Heat Treat
- ☐ Inspection Strip in Tube
- ☐ Ripples in Bend
- ☐ Torque Waves in Extrusion
- ☐ Turning Sequence
- ☐ Wave/Twist in Tube

General

- ☐ Bend
- ☐ BOM/Route
- ☐ Broken/Damaged
- ☐ Burrs
- ☐ Contamination
- ☐ Countersink
- ☐ Cut Too Short
- ☐ Drill Holes
- ☐ Drawing
- ☐ Finish
- ☐ Folio
- ☐ Grain
- ☐ Hardware
- ☐ Inspection Incomplete
- ☐ Instructions Incomplete/Unclear
- ☐ Maintenance
- ☐ Mislabeled
- ☐ Misread
- ☐ Offset
- ☐ Out of Calibration
- ☐ Out of Sequence
- ☐ Outside Dimensions
- ☐ Ovalized
- ☐ Over/Under tolerance
- ☐ Part Incorrect
- ☐ Part Lost/Missing
- ☐ Part Moved
- ☐ Positioned Wrong
- ☐ Power Loss/Surge
- ☐ Pressure/Forced
- ☐ Temperature/Cure
- ☐ Weld
- ☐ Wrong Stock Pulled
- ☐ Other _____

Picklist Print

April-16-13 12:37:43 PM

Work Order ID: 99944 *99944*

Parent Item: 646.4001 *646 4001*

Parent Item Name: AS350 Cable Cutter

Start Date: 4/16/13 **Required Date:** 4/30/13

Start Qty: 1.00 **Required Qty:** 1.00

AN3-11A *AN3-11A* Purchased No Each 672.0000 **

Bolt

Location	Loc Qty	Loc Code
ST351	72	
123525	72	
ST512	600	
115457	100	
123352	200	
123759	300	

600.0990 *600 0990* Purchased No Each 9.0000 **

Magnabond 6398 Part A (One 4 oz can)

Location	Loc Qty	Loc Code
ST	9	
125051	9	

600.0991 *600 0991* Purchased No Each 9.0000 **

Magnabond 6398 Part B (One 4 oz can)

Location	Loc Qty	Loc Code
ST	9	
125051	9	

600.1012 *600 1012* Purchased No Each 9.0000 **

Sealant (One 6 oz Semkit)

Location	Loc Qty	Loc Code
ST	9	
125051	9	

DQA: _____ Date: _____

NCR: Yes / No

WORK ORDER NON-CONFORMANCE / UPDATE

QA Closed: Date:

Work Order: _____

Part No. _____

NCR No. _____

DISPOSITION

- Rework ☐
- Scrap ☐
- Use-as-is ☐
- Work Order Update ☐

AGAINST DEPARTMENT/PROCESS

- Skid-tube ☐
- Machining ☐
- Thermoforming ☐
- Large Fab ☐
- Crosstube ☐
- Small Fab ☐
- Finishing ☐
- Composite ☐
- Water Jet ☐
- Prod. Eng. Coor. ☐
- Rec/Store/Packaging ☐
- Supplier ☐
- Engineering ☐
- Quality ☐
- Other ☐

Root Cause		Date	Step	Qty	Description of work order update or Non-conformance	Initial Chief Eng	Action Description	Sign & Date	Verification	QC Inspector
Doc/Data										
Equip/Tooling										
Operator										
Material										
Setup										
Other										
Process										
Supplier										
Training										
Unapproved										

FAULT CATEGORY

Landing Gear

- ☐ Bending
- ☐ Centre Not Concentric to O/S
- ☐ Cracks
- ☐ Crushed/Crimped
- ☐ Cuffs
- ☐ Heat Treat
- ☐ Inspection Strip in Tube
- ☐ Ripples in Bend
- ☐ Torque Waves in Extrusion
- ☐ Turning Sequence
- ☐ Wave/Twist in Tube

General

- ☐ Bend
- ☐ BOM/Route
- ☐ Broken/Damaged
- ☐ Burrs
- ☐ Contamination
- ☐ Countersink
- ☐ Cut Too Short
- ☐ Drill Holes
- ☐ Drawing
- ☐ Finish
- ☐ Folio
- ☐ Grain
- ☐ Hardware
- ☐ Inspection Incomplete
- ☐ Instructions Incomplete/Unclear
- ☐ Maintenance
- ☐ Mislabeled
- ☐ Misread
- ☐ Offset
- ☐ Out of Calibration
- ☐ Out of Sequence
- ☐ Outside Dimensions
- ☐ Ovalized
- ☐ Over/Under tolerance
- ☐ Part Incorrect
- ☐ Part Lost/Missing
- ☐ Part Moved
- ☐ Positioned Wrong
- ☐ Power Loss/Surge
- ☐ Pressure/Forced
- ☐ Temperature/Cure
- ☐ Weld
- ☐ Wrong Stock Pulled
- ☐ Other

_____

_____

_____

Picklist Print

April-16-13 12:37:43 PM

Work Order ID: 99944 *99944*

Parent Item: 646.4001 *646 4001*

Parent Item Name: AS350 Cable Cutter

Start Date: 4/16/13 **Required Date:** 4/30/13

Start Qty: 1.00 **Required Qty:** 1.00

600.0129 Purchased No f 128.0000 **

600 0129

VHB Tape (75935A651 mcmaster)

1 X 96"

SHP

Location	Loc Qty	Loc Code
ST	128	
125031	128	

B125540

600.1013 Purchased No Each 945.0000 **

600 1013

Tape Primer

SHP

Location	Loc Qty	Loc Code
ST139A	945	
125154	945	

646.3910 Manufactured No Each 72.0000 **

646 3910

Shim

SHP

Location	Loc Qty	Loc Code
ST139B	22	
125083	22	
ST139d	50	
93238	50	

B99658

646.3911 Manufactured No Each 20.0000 **

646 3911

Shim

SHP

Location	Loc Qty	Loc Code
ST139A	1	
125083	1	
ST139d	19	
93362	19	

B99775

M.L. 13-06-29

M.L.

M.L.

M.L.

DQA: _____ Date: _____

NCR: Yes / No

WORK ORDER NON-CONFORMANCE / UPDATE

QA Closed: Date:

Work Order: _____

Part No. _____

NCR No. _____

DISPOSITION

Rework ☐
Scrap ☐
Use-as-is ☐
Work Order Update ☐

AGAINST DEPARTMENT/PROCESS

Skid-tube ☐ Crosstube ☐ Water Jet ☐ Engineering ☐
Machining ☐ Small Fab ☐ Prod. Eng. Coor. ☐ Quality ☐
Thermoforming ☐ Finishing ☐ Rec/Store/Packaging ☐ Other ☐
Large Fab ☐ Composite ☐ Supplier ☐

Root Cause		Date	Step	Qty	Description of work order update or Non-conformance	Initial Chief Eng	Action Description	Sign & Date	Verification	QC Inspector
Doc/Data	☐									
Equip/Tooling	☐									
Operator	☐									
Material	☐									
Setup	☐									
Other	☐									
Process	☐									
Supplier	☐									
Training	☐									
Unapproved	☐									

FAULT CATEGORY

Landing Gear

☐ Bending
☐ Centre Not Concentric to O/S
☐ Cracks
☐ Crushed/Crimped
☐ Cuffs
☐ Heat Treat
☐ Inspection Strip in Tube
☐ Ripples in Bend
☐ Torque Waves in Extrusion
☐ Turning Sequence
☐ Wave/Twist in Tube

General

☐ Bend
☐ BOM/Route
☐ Broken/Damaged
☐ Burrs
☐ Contamination
☐ Countersink
☐ Cut Too Short
☐ Drill Holes
☐ Drawing
☐ Finish
☐ Folio
☐ Grain
☐ Hardware
☐ Inspection Incomplete
☐ Instructions Incomplete/Unclear
☐ Maintenance
☐ Mislabeled
☐ Misread
☐ Offset
☐ Out of Calibration
☐ Out of Sequence
☐ Outside Dimensions
☐ Ovalized
☐ Over/Under tolerance
☐ Part Incorrect
☐ Part Lost/Missing
☐ Part Moved
☐ Positioned Wrong
☐ Power Loss/Surge
☐ Pressure/Forced
☐ Temperature/Cure
☐ Weld
☐ Wrong Stock Pulled
☐ Other

_____
_____
_____

Picklist Print

April-16-13 12:37:43 PM

Work Order ID: 99944 *99944*

Parent Item: 646.4001 *646 4001*

Parent Item Name: AS350 Cable Cutter

Start Date: 4/16/13 **Required Date:** 4/30/13

Start Qty: 1.00 **Required Qty:** 1.00

646.3912 Manufactured No Each 73.0000 **

646 3912

Shim

Location	Loc Qty	Loc Code
ST139A	22	
125083	22	
ST139d	51	
93423	51	

646.3913 Manufactured No Each 36.0000 **

646 3913

Shim

Location	Loc Qty	Loc Code
ST139B	16	
125083	16	
ST139d	20	
93160	20	

AN3-12A Purchased No Each 59.0000 **

AN3-12A

Bolt

Location	Loc Qty	Loc Code
GA	6	
122407	6	
ST351	5	
114536	1	
123352	4	
ST512	48	
123759	48	

DQA: _____ Date: _____

NCR: Yes / No

WORK ORDER NON-CONFORMANCE / UPDATE

QA Closed: Date:

Work Order: _____

Part No. _____

NCR No. _____

DISPOSITION

- Rework ☐
- Scrap ☐
- Use-as-is ☐
- Work Order Update ☐

AGAINST DEPARTMENT/PROCESS

- Skid-tube ☐
- Machining ☐
- Thermoforming ☐
- Large Fab ☐
- Crosstube ☐
- Small Fab ☐
- Finishing ☐
- Composite ☐
- Water Jet ☐
- Prod. Eng. Coor. ☐
- Rec/Store/Packaging ☐
- Supplier ☐
- Engineering ☐
- Quality ☐
- Other ☐

Root Cause		Date	Step	Qty	Description of work order update or Non-conformance	Initial Chief Eng	Action Description	Sign & Date	Verification	QC Inspector
Doc/Data	☐									
Equip/Tooling	☐									
Operator	☐									
Material	☐									
Setup	☐									
Other	☐									
Process	☐									
Supplier	☐									
Training	☐									
Unapproved	☐									

FAULT CATEGORY

Landing Gear

- ☐ Bending
- ☐ Centre Not Concentric to O/S
- ☐ Cracks
- ☐ Crushed/Crimped
- ☐ Cuffs
- ☐ Heat Treat
- ☐ Inspection Strip in Tube
- ☐ Ripples in Bend
- ☐ Torque Waves in Extrusion
- ☐ Turning Sequence
- ☐ Wave/Twist in Tube

General

- ☐ Bend
- ☐ BOM/Route
- ☐ Broken/Damaged
- ☐ Burrs
- ☐ Contamination
- ☐ Countersink
- ☐ Cut Too Short
- ☐ Drill Holes
- ☐ Drawing
- ☐ Finish
- ☐ Folio
- ☐ Grain
- ☐ Hardware
- ☐ Inspection Incomplete
- ☐ Instructions Incomplete/Unclear
- ☐ Maintenance
- ☐ Mislabeled
- ☐ Misread
- ☐ Offset
- ☐ Out of Calibration
- ☐ Out of Sequence
- ☐ Outside Dimensions
- ☐ Ovalized
- ☐ Over/Under tolerance
- ☐ Part Incorrect
- ☐ Part Lost/Missing
- ☐ Part Moved
- ☐ Positioned Wrong
- ☐ Power Loss/Surge
- ☐ Pressure/Forced
- ☐ Temperature/Cure
- ☐ Weld
- ☐ Wrong Stock Pulled
- ☐ Other

_____

_____

_____

Picklist Print

April-16-13 12:37:43 PM

Work Order ID: 99944

99944

Parent Item: 646.4001

646 4001

Parent Item Name: AS350 Cable Cutter

Start Date: 4/16/13 **Required Date:** 4/30/13

Start Qty: 1.00 **Required Qty:** 1.00

MS27039-1-16 Purchased No Each 70.0000 **

MS27039-1-16

Screw

N.D. 13-06-20

Location	Loc Qty	Loc Code
ST306	70	
122993	70	

2x

DQA: _____ Date: _____

NCR: Yes / No

WORK ORDER NON-CONFORMANCE / UPDATE

QA Closed: Date:

Work Order: _____

Part No. _____

NCR No. _____

DISPOSITION

Rework ☐
Scrap ☐
Use-as-is ☐
Work Order Update ☐

AGAINST DEPARTMENT/PROCESS

Skid-tube ☐ Crosstube ☐ Water Jet ☐ Engineering ☐
Machining ☐ Small Fab ☐ Prod. Eng. Coor. ☐ Quality ☐
Thermoforming ☐ Finishing ☐ Rec/Store/Packaging ☐ Other ☐
Large Fab ☐ Composite ☐ Supplier ☐

Root Cause		Date	Step	Qty	Description of work order update or Non-conformance	Initial Chief Eng	Action Description	Sign & Date	Verification	QC Inspector
Doc/Data	☐									
Equip/Tooling	☐									
Operator	☐									
Material	☐									
Setup	☐									
Other	☐									
Process	☐									
Supplier	☐									
Training	☐									
Unapproved	☐									

FAULT CATEGORY

Landing Gear

☐ Bending
☐ Centre Not Concentric to O/S
☐ Cracks
☐ Crushed/Crimped
☐ Cuffs
☐ Heat Treat
☐ Inspection Strip in Tube
☐ Ripples in Bend
☐ Torque Waves in Extrusion
☐ Turning Sequence
☐ Wave/Twist in Tube

General

☐ Bend
☐ BOM/Route
☐ Broken/Damaged
☐ Burrs
☐ Contamination
☐ Countersink
☐ Cut Too Short
☐ Drill Holes
☐ Drawing
☐ Finish
☐ Folio
☐ Grain
☐ Hardware
☐ Inspection Incomplete
☐ Instructions Incomplete/Unclear
☐ Maintenance
☐ Mislabeled
☐ Misread
☐ Offset
☐ Out of Calibration
☐ Out of Sequence
☐ Outside Dimensions
☐ Ovalized
☐ Over/Under tolerance
☐ Part Incorrect
☐ Part Lost/Missing
☐ Part Moved
☐ Positioned Wrong
☐ Power Loss/Surge
☐ Pressure/Forced
☐ Temperature/Cure
☐ Weld
☐ Wrong Stock Pulled
☐ Other

_____
_____
_____

APICAL INDUSTRIES, INC.

ENGINEERING CHANGE NOTICE NO 03079 | SHEET 1 OF 1

DWG NO. 646.4000 | REV: A | PREPARED BY: N.CAP | DATE: 03/21/11 | EFFECT ON DWG ☐ INC. ☒ UNINC.

DWG TITLE: AS350 CABLE CUTTERS KIT

APPROVED BY: ENGR [signature] MFG [signature] QC [signature] EFF: NEXT ORDER

TRANSACTION CODES (TC): A-ADD C-CREATE R-REVISE D-DELETE

REASON: CREATED FIXED AND CCK WITHOUT FIXED PROVISIONS KIT

SHEET 1, BOM, IS:

99944 MCJ
13-04-16

REF	REF		REF	65	647.5701	GPS MOUNT KIT	⚠	
		6		64	601.3151	WASHER	MS21497FW632P	
		2		63	601.2911	SCREW	MS24694S53	
	2		2	62	601.2637	SCREW	MS27039-1-15	
	2		2	61	601.2763	BOLT	AMO-12A	
	1		1	60	646.3913	SHIM		
	4		4	59	646.3912	SHIM		
	1		1	58	646.3911	SHIM		
	4		4	57	646.3910	SHIM		
	5		5	56	600.1013	PRIMER		
	8 FT		8 FT	55	600.0129	VHB TAPE		
	1	1	1	54	600.1012	SEALANT	PR-1423 CLASS B	
A604	A603	A602	A601	FIND #	PART #	DESCRIPTION	MAT'L	SPEC.

	1		1	53	600.0991	MACHINING 6398 PART B	⚠	
	1		1	52	600.0990	MACHINING 6398 PART A	⚠	
	8		8	51	601.2826	BOLT	AMO-11A	
		2		50	646.3814	WIPER BRACKET		
		2		49	601.2910	SCREW	MS27039-1-18	
2			2	48	601.1365	SCREW	MS27039-1-18	
2			2	47	646.3719	DOUBLER		
	2		2	46	646.3718	CUSTOM WASHER		
1			1	45	646.3717	DOUBLER		
	22	2	22	44	601.1948	SCREW	MS27039-1-19	
	2		2	43	601.1952	SCREW	MS27039-1-20	
	4		4	42	601.1956	SCREW	MS27039-1-21	
	2		2	41	601.2829	SCREW	MS24694S54	
	2		2	40	601.2831	RIVET	MS20426AD5-7	
	1		1	39	646.3716	GAUGE BRACKET		
	6		6	38	601.1953	SCREW	MS27039-1-12	
2			2	37	646.3715	STRUT DOUBLER		
	2		2	36	601.2824	BOLT	AMO-5A	
36			36	35	601.2277	RIVET	CR3243-3-02	
18			18	34	600.0795	NUTPLATE	MS21047-3	
3			3	33	601.2565	RIVET	MS20470AD5-7	
1			1	32	646.3813	STRUT BRACKET		
4			4	31	601.2822	BOLT	AMO-3A	
2			2	30	646.3812	GUSSET BRACKET		
8			8	29	601.2564	RIVET	MS20470AD5-6	
1			1	28	646.3714	GUSSET		
	1		1	27	646.3610	FILLER		
	1		1	26	601.2830	SCREW	MS24694S55	
	2		2	25	601.2825	BOLT	AMO-6A	
	1		1	24	646.3811	RADIUS BLOCK		
	1		1	23	646.3712	CLIP		
	1		1	22	646.3711	CLIP		
8			8	21	601.2832	RIVET	MS20470AD5-5.5	
14			14	20	601.2020	RIVET	CR3213-5-3	
10			10	19	601.2823	BOLT	AMO-4A	
	1		1	18	601.2827	BOLT	AMO-13A	
	5		5	17	601.2912	SCREW	MS24694S31	
1			1	16	646.3713	GUSSET		
1			1	15	646.3210	SUPPORT		
1			1	14	646.3710	DOUBLER		
	1		1	13	646.3110	CHANNEL		
8	55	6	63	12	601.1624	LOCKNUT	MS21042L3	
18	116	16	134	11	601.1607	WASHER	MS21497FW632P	
		1		10	646.3411	RH WIPER DEFLECTOR		
		1		9	646.3410	LH WIPER DEFLECTOR		
	1		1	8	646.3513	STRUT		
	1		1	7	646.3512	STRUT		
	1		1	6	646.3511	STRUT		
	1		1	5	646.3510	STRUT		
2			2	4	646.3810	BRACKET		
	1		1	3	646.2910	DEFLECTOR		
	1		1	2	646.3001	LOWER CUTTER ASSY		
	1		1	1	646.3301	UPPER CUTTER ASSY		
X					646.4004	FIXED PROVISIONS KIT		
	X				646.4003	[illegible]		
		X			646.4006	[illegible]		
			X		646.4001	AS350 CABLE CUTTERS KIT		
A604	A603	A602	A601	FIND #	PART #	DESCRIPTION	MAT'L	SPEC.

DOCUMENTS EFFECTED: ☒ MDL ☒ INSTALL INSTRUC ☒ ICA ☒ BOM

CHANGE CATEGORY ☐ MAJOR ☒ MINOR

DER REVIEW REQUIRED ☐ YES ☒ NO

99944

APICAL INDUSTRIES, INC.	ENGINEERING CHANGE NOTICE NO. 03046				SHEET 1 OF 1
	DWG NO. 646.4000	REV: A	PREPARED BY J JACKSON	DATE: 01/24/11	EFFECT ON DWG ☐ INC ☒ UNINC.
	DWG TITLE: AS350 CABLE CUTTERS KIT				
	APPROVED BY: ENGR	MFG	QC	EFF: NEXT ORDER	
TRANSACTION CODES (TC): A-ADD C-CREATE R-REVISE D-DELETE	REASON: ADDED GPS MOUNT KIT, F/N 65. REVISED DRAWING VIEWS. ADDED NOTE 7.				

SHEET 1, ZONE B1 IS:

7 AT CUSTOMERS OPTION, INSTALL F/N 65 BY MATCH DRILLING ONTO F/N 1.

SHEET 2, ZONE A4 IS:

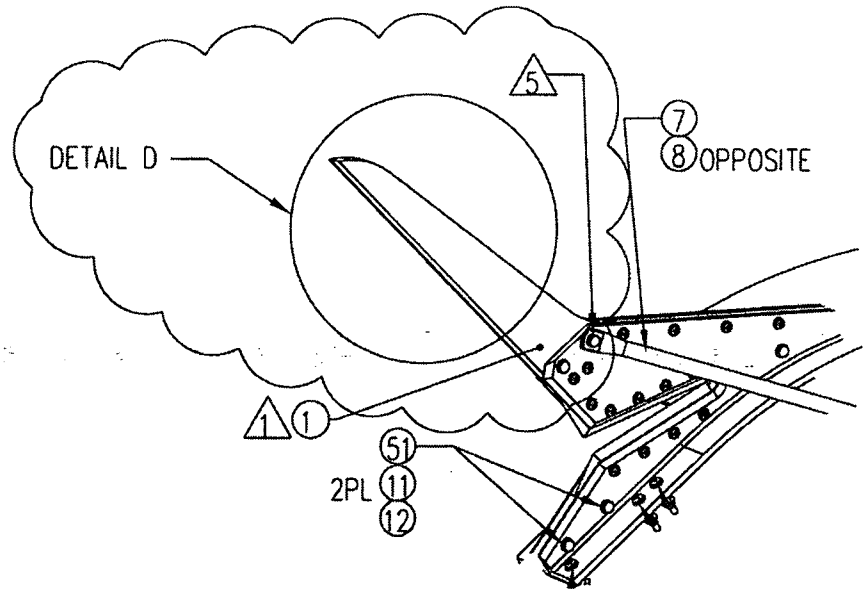

SHEET 2, ZONE B2 IS:

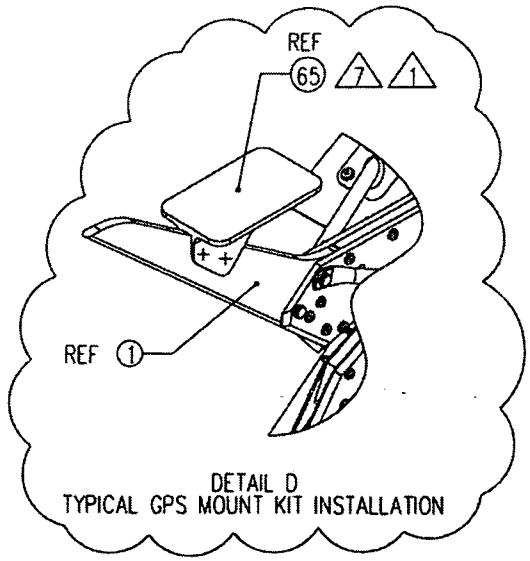

DETAIL D
TYPICAL GPS MOUNT KIT INSTALLATION

F/N	TC	PART NUMBER	QTY	DESCRIPTION	MATERIAL	SPECIFICATION
65	A	647.5701	REF	GPS MOUNT KIT	7	

DOCUMENTS EFFECTED: ☐ MDL ☐ INSTALL INSTRUC ☐ ICA ☒ BOM

CHANGE CATEGORY ☐ MAJOR ☒ MINOR

DER REVIEW REQUIRED ☐ YES ☒ NO

99944

NOTES

1. AFTER INSTALLATION, APPLY F/N 54 A/R TO FILL GAPS AND FILLET EDGES
2. INSTALL F/N 14 WITH F/N 52 & 53
3. 3M VHB ADHESIVE TAPE .025" THICK X .50" WIDE
   VENDOR : MCMASTER-CARR P/N 75935A651
4. 3M TAPE PRIMER 94, APPLY TO BOTH SURFACES A/R BEFORE TAPE
   VENDOR: R.S. HUGHES P/N 021200-24216
5. REUSE FASTENERS FROM F/N 1
6. USE WASHERS AS REQUIRED AS SHIMS TO OBTAIN BEST FITMENT

Early 03074

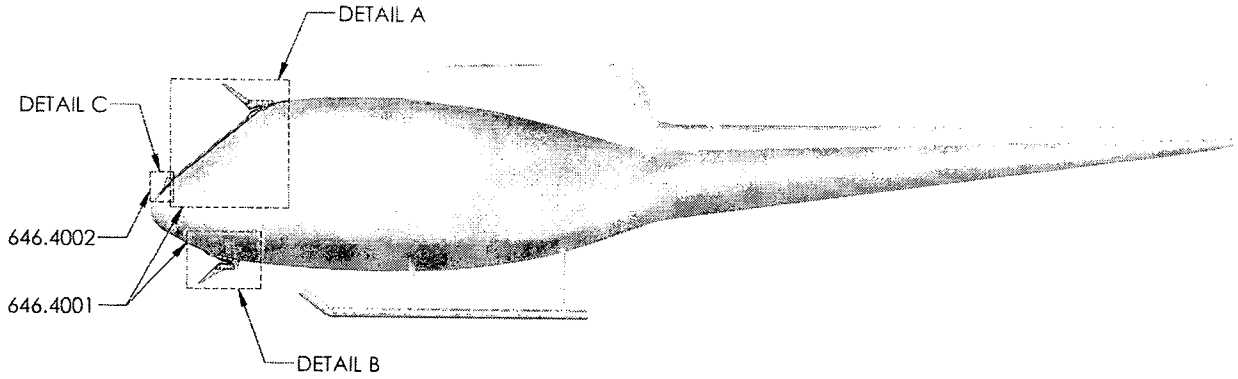

	6		64	601.3151	WASHER	NAS1149F0363P	
	2		63	601.2911	SCREW	MS24694S53	
		2	62	601.2637	SCREW	MS27039-1-16	
		2	61	601.2763	BOLT	ANG 12A	
		1	60	646.3913	SHIM		
		4	59	646.3912	SHIM		
		1	58	646.3911	SHIM		
ASSY	ASSY	FIND #		PART #	DESCRIPTION	MATL	SPEC

			56	646.3811	RADIUS BLOCK		
			55	600.0961	MARKING [illegible]		
			54	600.1611	SEAL [illegible]		
			53	600.0991	MARKING [illegible]		
		8	51	601.2826	BOLT	AN3-11A	
	2		50	646.3814	WIPER BRACKET		
	2		49	601.2910	SCREW	MS27039-1-18	
		2	48	601.1365	SCREW	MS27039-1-16	
		2	47	646.3719	DOUBLER		
		2	46	646.3718	CUSTOM WASHER		
		1	45	646.3717	DOUBLER		
	2	22	44	601.1948	SCREW	MS27039-1-19	
		2	43	601.1952	SCREW	MS27039-1-20	
		4	42	601.1956	SCREW	MS27039-1-21	
		2	41	601.2829	SCREW	MS24694S56	
		2	40	601.2831	RIVET	MS20426AD5-7	
		1	39	646.3716	GAUGE BRACKET		
		6	38	601.1953	SCREW	MS27039-1-12	
		2	37	646.3715	STRUT DOUBLER		
		2	36	601.2824	BOLT	AN3-5A	
		36	35	601.2277	RIVET	CCR2645-3-D	
		18	34	600.0795	NUTPLATE	MS21047-3	
		3	33	601.2565	RIVET	MS20470AD5-7	
		1	32	646.3813	STRUT BRACKET		
		4	31	601.2822	BOLT	AN3-3A	
		2	30	646.3812	GUSSET BRACKET		
		8	29	601.2564	RIVET	MS20470AD5-6	
		1	28	646.3714	GUSSET		
		1	27	646.3610	FILLER		
		1	26	601.2830	SCREW	MS24694S55	
		2	25	601.2825	BOLT	AN3-6A	
		1	24	646.3811	RADIUS BLOCK		
		1	23	646.3712	CLIP		
		1	22	646.3711	CLIP		
		8	21	601.2832	RIVET	MS20470AD6-5.5	
		14	20	601.2020	RIVET	CR3213-5-3	
		10	19	601.2823	BOLT	AN3-4A	
		1	18	601.2827	BOLT	AN3-13A	
		5	17	601.2912	SCREW	MS24694S51	
		1	16	646.3713	GUSSET		
		1	15	646.3210	SUPPORT		
		1	14	646.3710	DOUBLER		
		1	13	646.3110	CHANNEL		
	6	63	12	601.1624	LOCKNUT	MS21042L3	
	16	134	11	601.1607	WASHER	NAS1149F0357P	
	1		10	646.3411	RH WIPER DEFLECTOR		
	1		9	646.3410	LH WIPER DEFLECTOR		
		1	8	646.3513	STRUT		
		1	7	646.3512	STRUT		
		1	6	646.3511	STRUT		
		1	5	646.3510	STRUT		
		2	4	646.3810	BRACKET		
		1	3	646.2910	DEFLECTOR		
		1	2	646.3001	LOWER CUTTER ASSY		
		1	1	646.3301	UPPER CUTTER ASSY		
				646.4002	AS350 WIPER DEFLECTOR KIT		
				646.4001	AS350 CABLE CUTTERS KIT		
ASSY	ASSY	FIND #		PART #	DESCRIPTION	MATL	SPEC

QTY — PARTS LIST

NEXT ASSY (S)

ORIGINAL DATE (MO-DA-YR) 06-21-08
DRAWN BY: S. HUFF
CHECKED: P. BRAVO
DRAWING APPROVAL: P. BRAVO 06-27-08
CONFIGURATION:

UNLESS OTHERWISE SPECIFIED DIMENSIONS ARE IN INCHES
TOLERANCES ARE:
2 PLACE DECIMALS ±.01
3 PLACE DECIMALS ±.005
ANGLES ± .5°

APICAL INDUSTRIES
2608 TEMPLE HEIGHTS DR.
OCEANSIDE, CA. 92056-3512 (760)724-5300

AS350 CABLE CUTTERS KIT

SIZE: 6 | CAGE CODE: 07MZ6 | DWG NO.: 646.4000 | REV: A

SCALE: NONE | SHEET 1 OF 4

99944

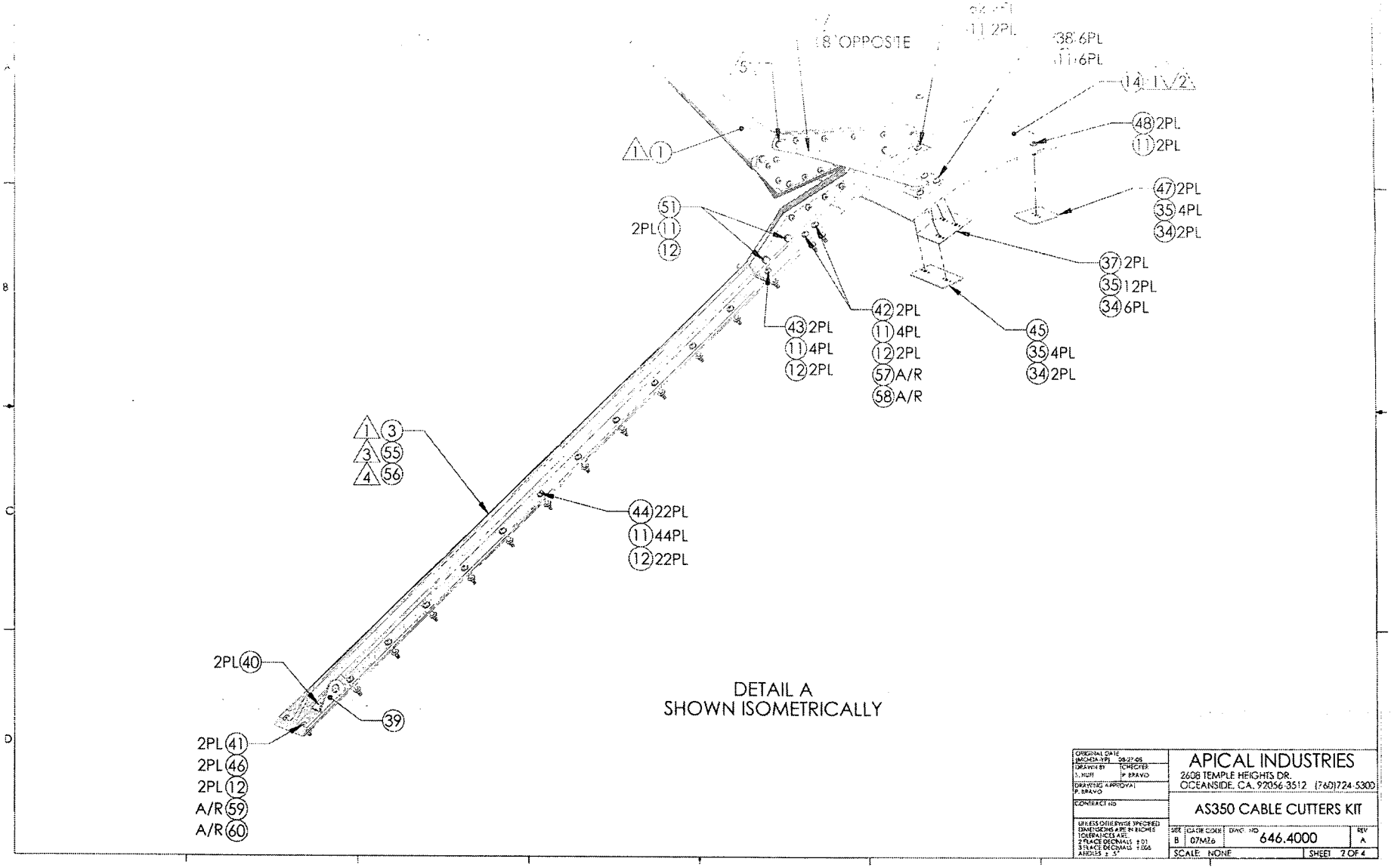

DETAIL A
SHOWN ISOMETRICALLY

ORIGINAL DATE (MONTH-YR) 08-27-08	APICAL INDUSTRIES
DRAWN BY S. HUH	CHECKED P. BRAVO
DRAWING APPROVAL P. BRAVO	2608 TEMPLE HEIGHTS DR. OCEANSIDE, CA. 92056-3512 (760)724-5300
CONTRACT NO	AS350 CABLE CUTTERS KIT
UNLESS OTHERWISE SPECIFIED DIMENSIONS ARE IN INCHES TOLERANCES ARE: 2 PLACE DECIMALS ± 01 3 PLACE DECIMALS ± 005 ANGLES ± 5°	SIZE B / CAGE CODE 07MZ6 / DWG NO 646.4000 / REV A
	SCALE: NONE / SHEET 2 OF 4

99944

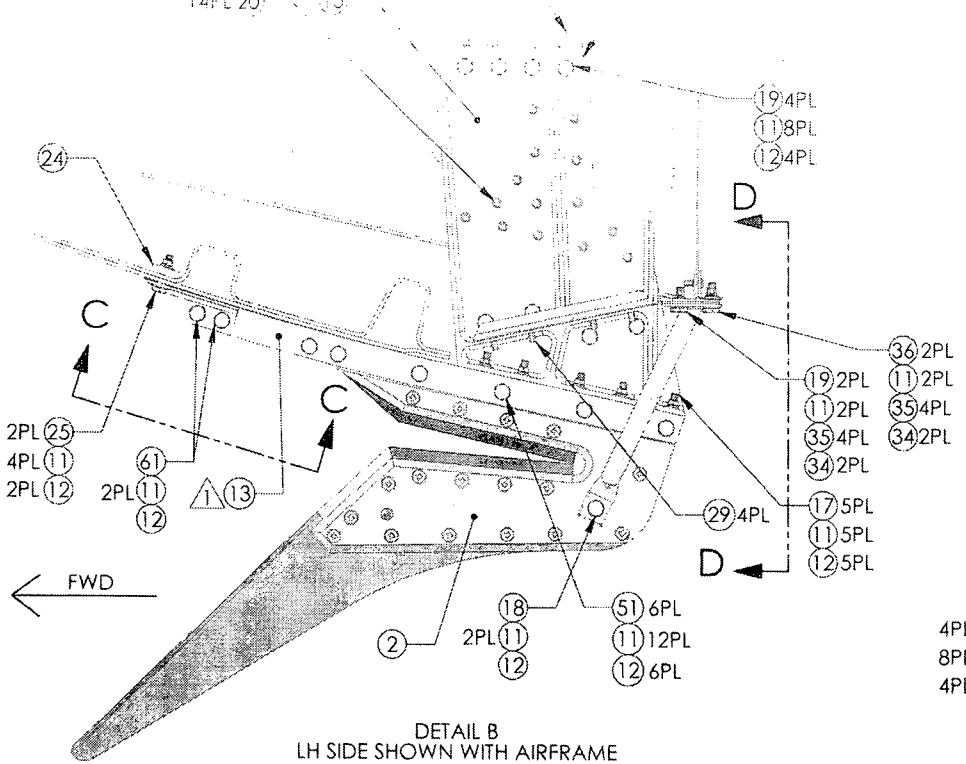

DETAIL B
LH SIDE SHOWN WITH AIRFRAME

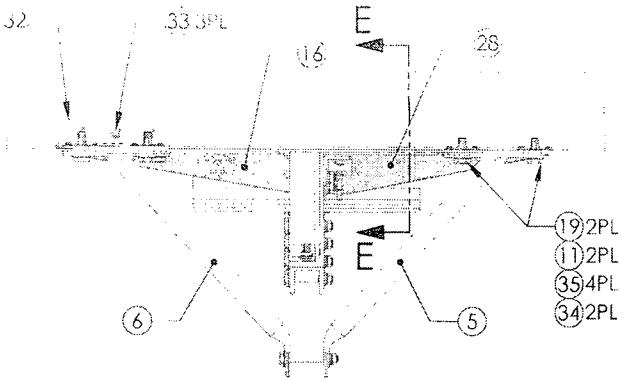

SECTION D-D
CUTTER HIDDEN FOR CLARITY

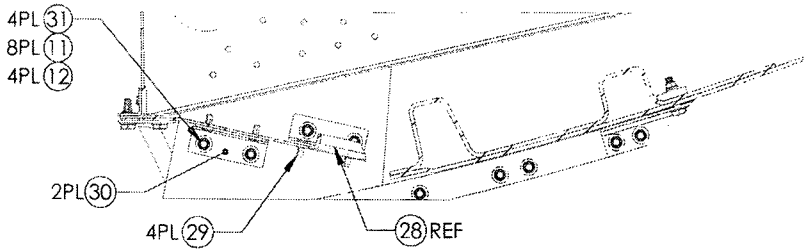

SECTION E-E

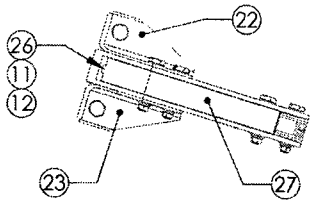

SECTION C-C

ORIGINAL DATE (MO-DA-YR) 08-27-08	APICAL INDUSTRIES 2608 TEMPLE HEIGHTS DR. OCEANSIDE, CA. 92056-3512 (760)724-5300
DRAWN BY S. HUFF / CHECKER P. BRAVO	
DRAWING APPROVAL P. BRAVO 08-27-08	AS350 CABLE CUTTERS KIT
CONTRACT No	
UNLESS OTHERWISE SPECIFIED DIMENSIONS ARE IN INCHES TOLERANCES ARE: 2 PLACE DECIMALS ±.01 3 PLACE DECIMALS ±.005 ANGLES ± 5°	SIZE B / CAGE CODE 07MZ6 / DWG NO. 646.4000 / REV A
	SCALE NONE / SHEET 3 OF 4

99944

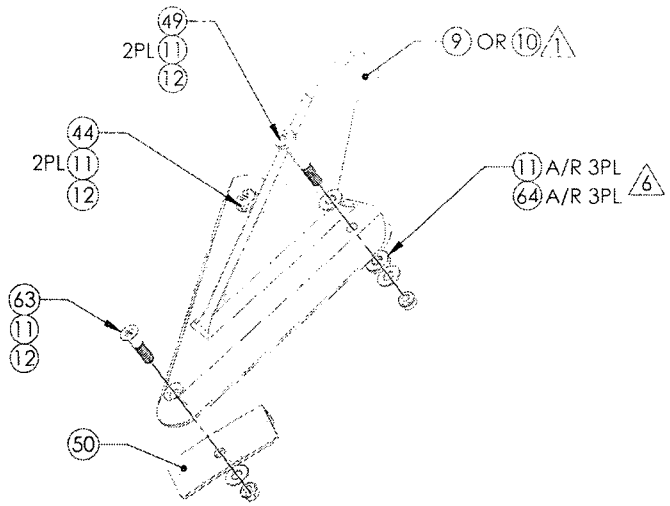

DETAIL C
LH SHOWN EXPLODED
RH OPPOSITE

ORIGINAL DATE (MO/DA/YR) 09-07-08	APICAL INDUSTRIES
DRAWN BY S. HERF	CHECKED P. BRAVO
DRAWING APPROVAL P. BRAVO 10-27-09	2608 TEMPLE HEIGHTS DR. OCEANSIDE, CA. 92056-3512 (760)724-5300
CONTRACT NO.	AS350 CABLE CUTTERS KIT
UNLESS OTHERWISE SPECIFIED DIMENSIONS ARE IN INCHES TOLERANCES ARE: 2 PLACE DECIMALS ± .01 3 PLACE DECIMALS ± .005 ANGLES ± .5°	SIZE B | CAGE CODE 07MZ6 | DWG NO 646.4000 | REV A
	SCALE: NONE | SHEET 4 OF 4